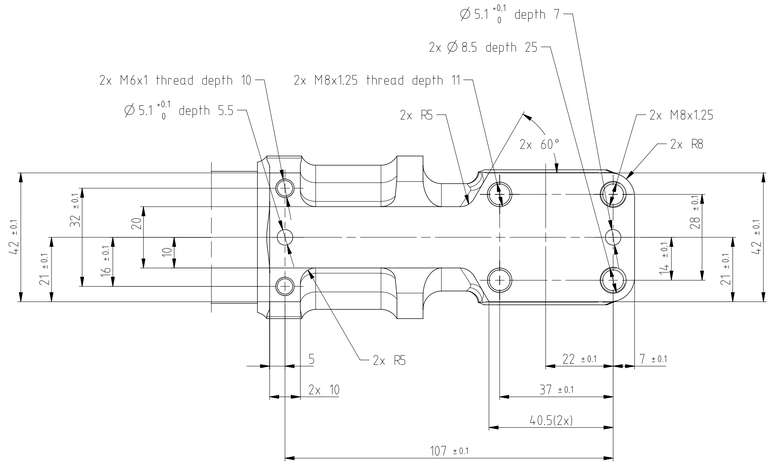

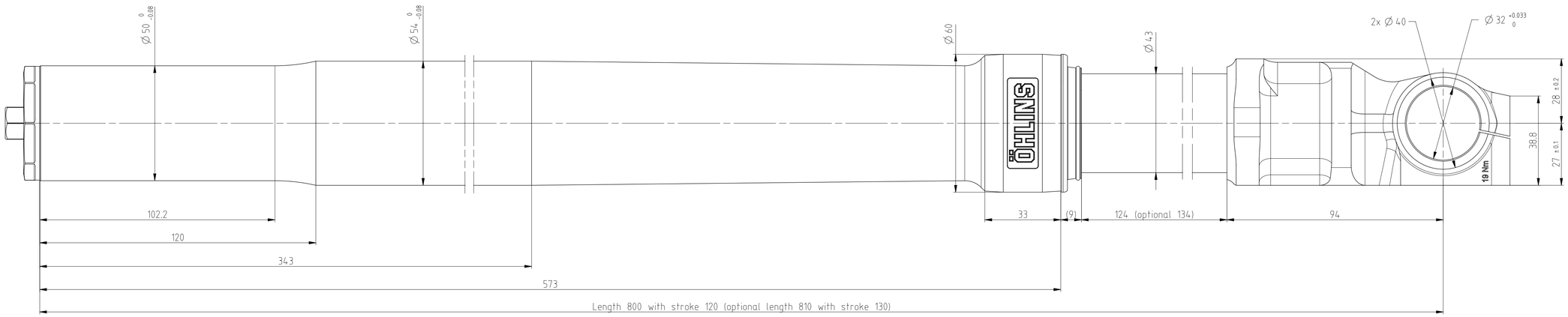

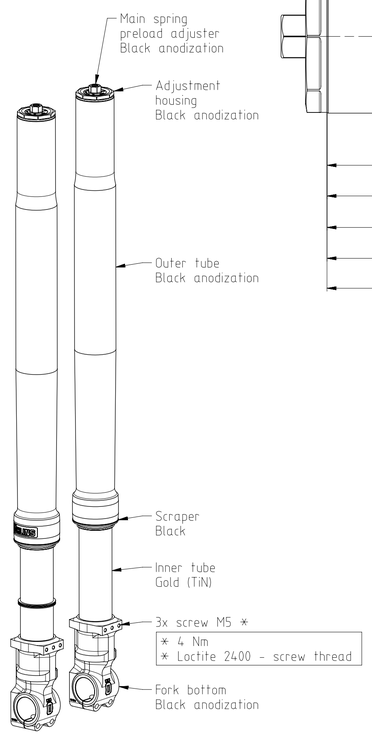

SCALE 1:4

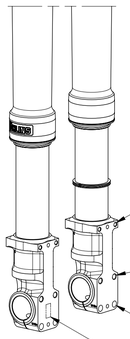

SCALE 1:4

Kit contents
1x front fork leg left hand side
1x front fork leg right hand side
4x 04757-05 screw MC6S M6x16 10.9
4x 04757-06 screw MC6S M8x16 10.9
4x 04757-09 screw MC6S M8x45 10.9

2x 04757-05 screw MC6S M6x16 10.9
* 7 Nm
* Loctite 2400 - screw thread

2x 04757-06 screw MC6S M8x16 10.9
* 19 Nm
* Loctite 2400 - screw thread

2x 04757-09 screw MC6S M8x45 10.9
* 19 Nm

Applies to both left and right hand side front fork leg
Part number (A), eng. revision (B), batch number (C) and serial number (D) permanently marked
Example AA AAABAA
CCCCCC DDD

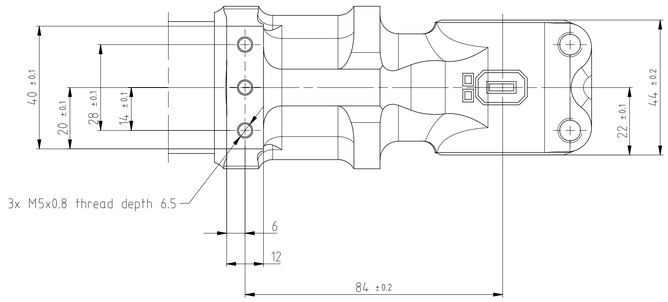

Loctite 2400 = 01791-25/26

* Carried out by the end user at installation

Rev.	Type of change	Sign.	Date	Rev.no
B	Marking note added	DN	191220	N/A
A	Drawing released for production	DN	190409	

Material	Heat treatment	Surface treatment

Date	Drawn	Approved	Format	Scale	Compare
2019-04-09	DN	TAN	A1	1:1	FG 424

ÖHLINS

Designation (swedish)

Designation (english): Front fork universal

Drawing number: FF 521

Revision: B

This document is confidential and must not be copied without our written permission, and the contents thereof must not be imparted to a third party nor be used for any unauthorized purpose. Contravention will be prosecuted.

SS-EN ISO 8015, SS-EN ISO 4288 AD -TS0062 and other specified standards apply. TS0014 Visual requirements level G applies if nothing else specified on drawing.

ISO 2768mK AD -TS0061 (valid if stated on drawing):

Basic size (mm)	Dev. (mm)
-6	±0.1
(6)-30	±0.2
(30)-120	±0.3
(120)-400	±0.5
(400)-1000	±0.8

Ext. radius, chamfer (mm)	Dev. (mm)
-0.5	±0.1
(0.5)-3	±0.2
(3)-6	±0.5
(6)-	±1

Angular short length (mm)	Dev. (°)
-1	±3°
(1)-10	±1°
(10)-50	±0°30'
(50)-120	±0°20'
(120)-400	±0°10'
(400)-	±0°5'